A15-1812

Technical Specification

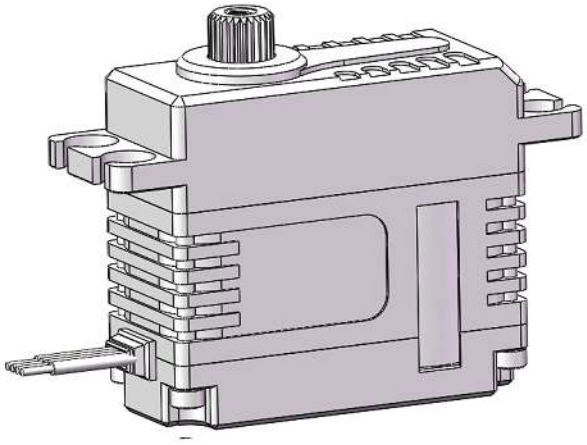

1. Installation Dimensions

Case Dimensions	35.5mm*15mm*32.5mm ±0.2mm
Weight	42g ±10%

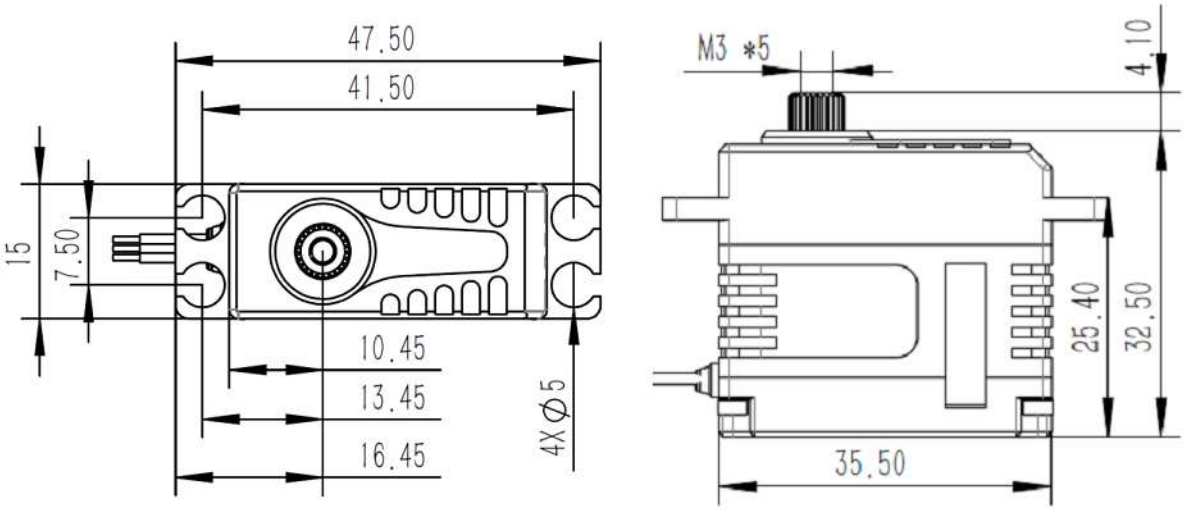

2. Operating Data

Operation Voltage(Rated)	DC7.4V
Operation Voltage Range	DC6.0V-8.4V
Rated Torque	0.5N.m@7.4V
Stalling torque	1.8N.m@7.4V
No-load Speed	0.12sec/60°@7.4V
Rated Speed	0.18sec/60°@7.4V
Travel Angle	±50° when 1000us-2000us
	±100° when 500us-2500us
Operating Temperature Range	-20℃.....+65℃

3. Performance

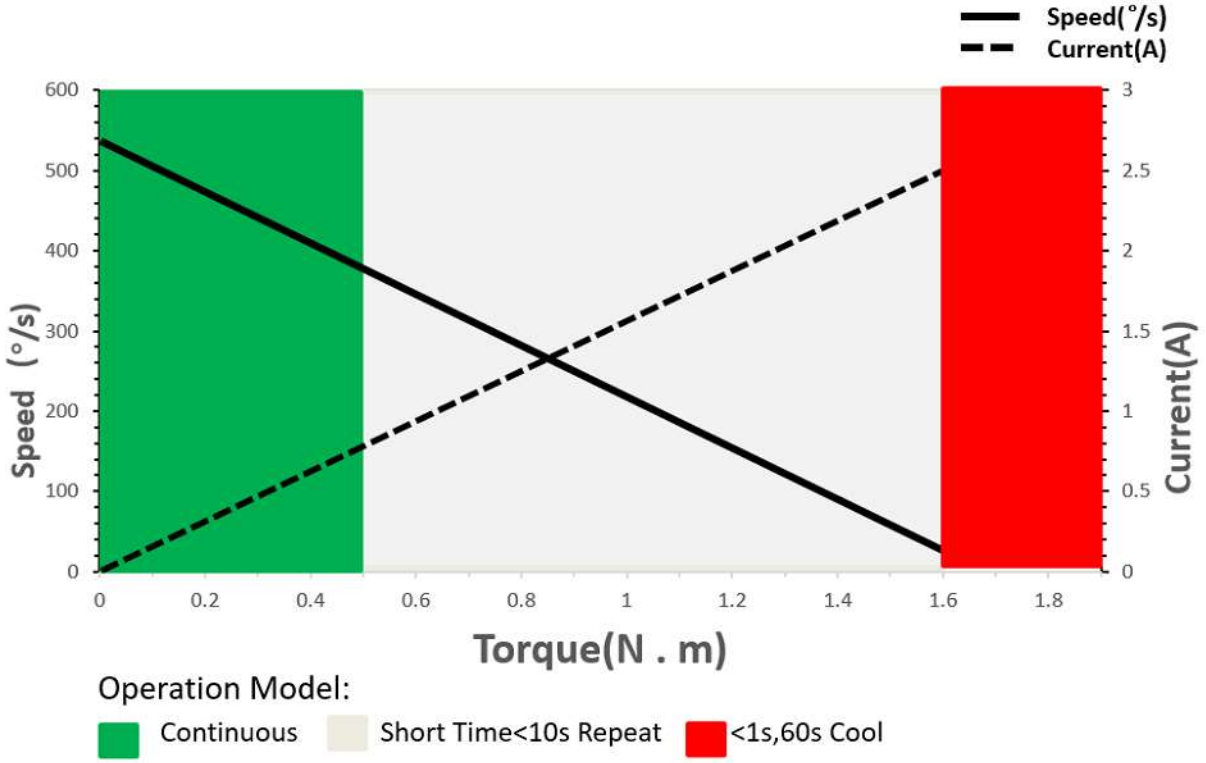

4. PWM Command Signal

Signal Voltage	TTL-Level: HIGH:min.3.3V,max.5.0V TTL-Level: Low:min.0.0V,max.1.5V
Pulse Lengths	500us - 2500us
Pulse Lengths for Position -100°/center/+100°	500us/1500us/2500us

5. Materials and protective features

Case Material	Aluminum Alloy
Motor Type	Brushless
Gear Set Material	Hardened Steel
Position Sensor	Potentiometer
Connecting Cable	26AWG

6. Output Shaft Spline

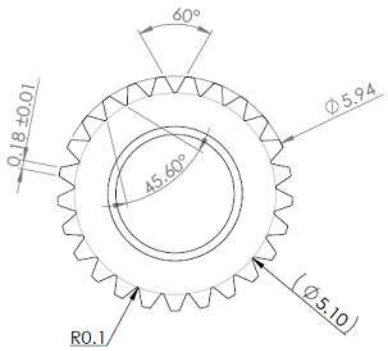

7. Electrical Connection

	Pin Assignment			
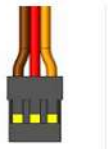 3 2 1	1	Yellow	SIG	Command Signal
	2	Red	+V DC	Supply Voltage
	3	Brown	GND	Supply Ground, Signal Ground

8. Accessories （Optionals）

Item	Item-No.
Aluminum Servo Arm (Single side)	**0625.11**
Aluminum Servo Arm (Single side)	**0625.23**
Aluminum Servo Arm (Single side)	**0625.40**
Aluminum Servo Arm (Double side)	**0625.60**

Item No.: 0625.11

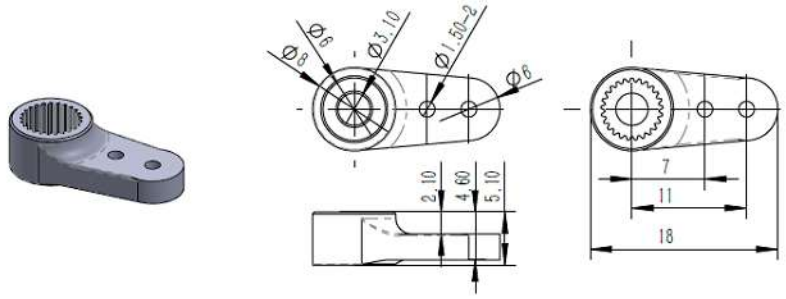

Item No.: 0625.23

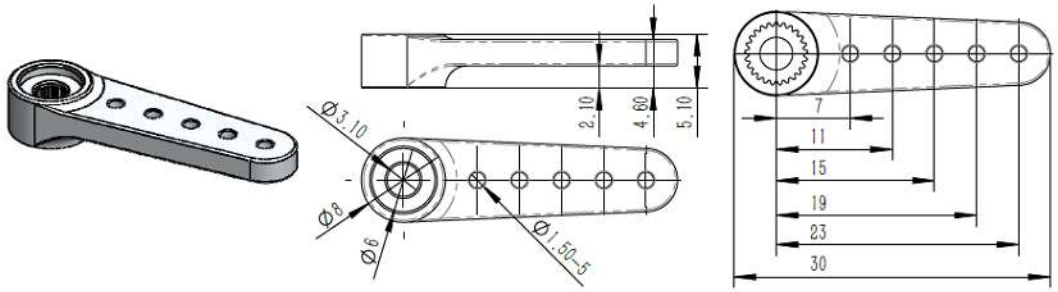

Item No.: 0625.40

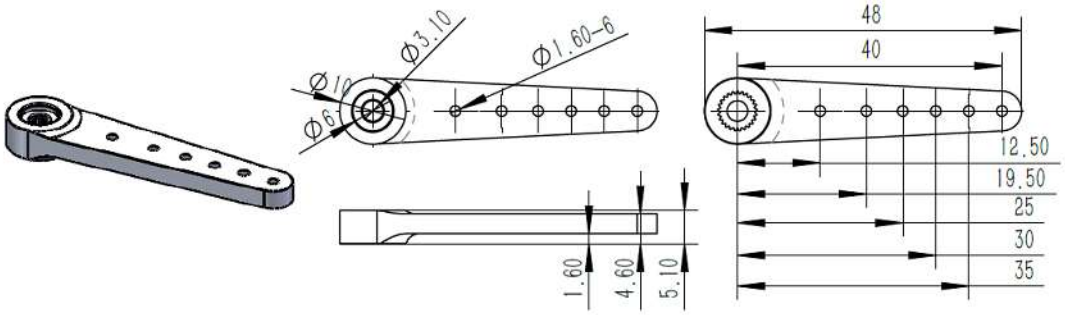

Item No.: 0625.60

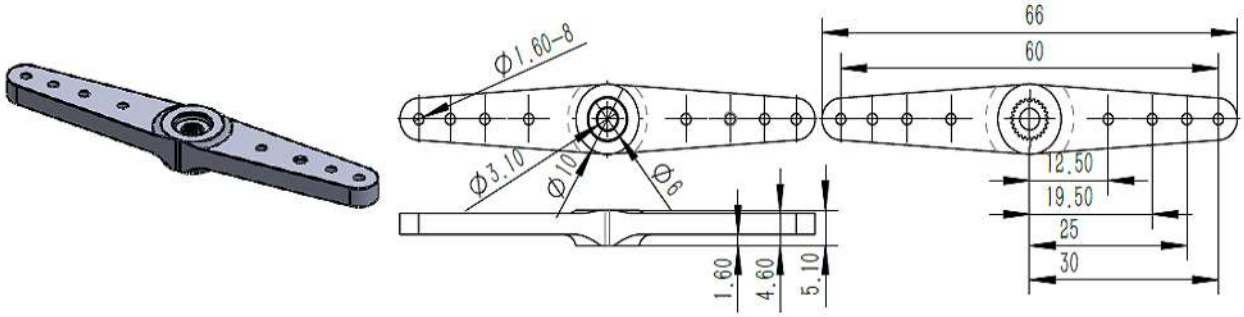

9. Item Number System

A15 - 1812

Servo Class

15mm Class

Performance

18: Stalling Torque (1.8N.m)

12: No-load Speed (0.12Sec/60°)