MS4512

Technical Specification

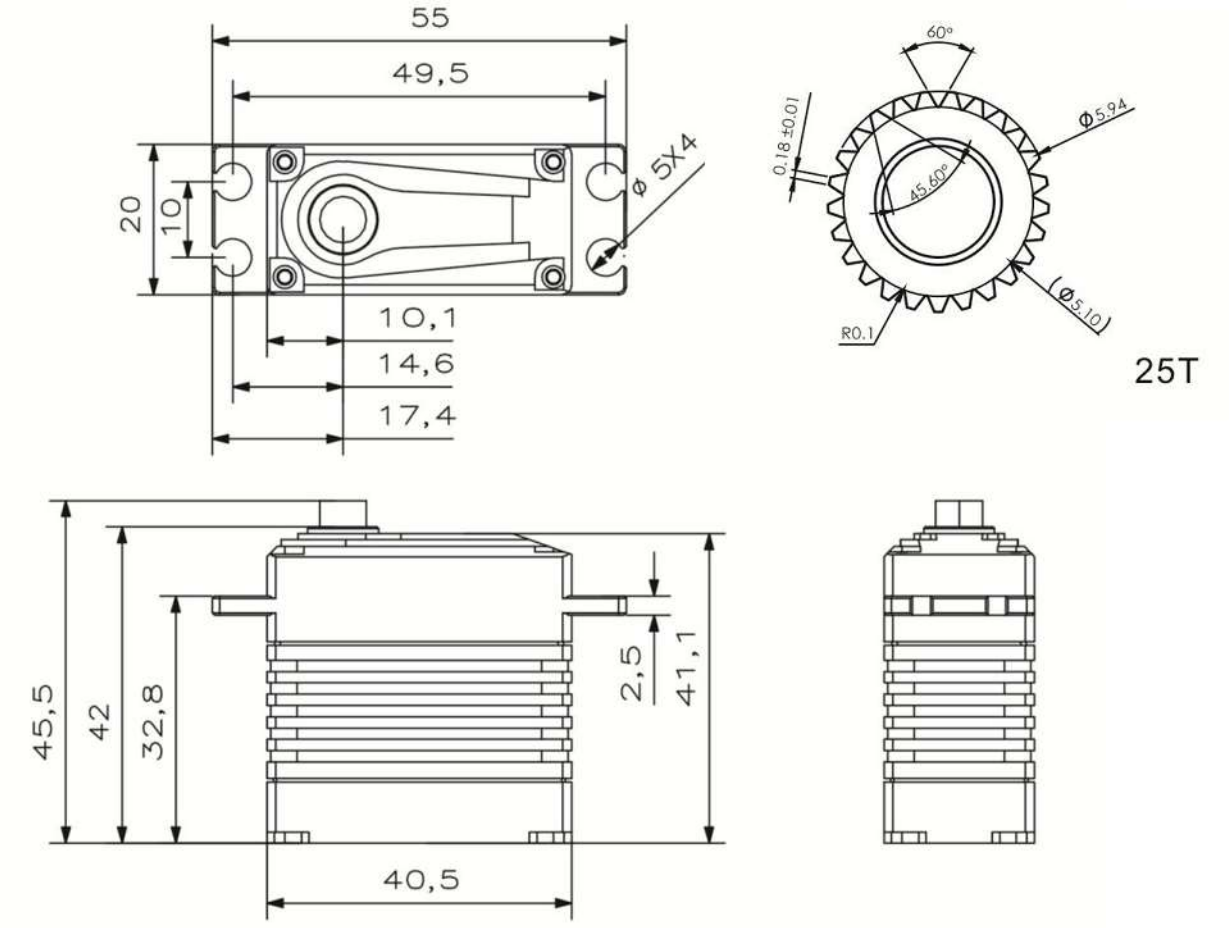

Operating Data

	MS4512
Operation Voltage(rated)	DC7.4V
Operation Voltage Range	DC6.0V-8.4V
Torque	38Kg.cm@6.0V
	42Kg.cm@7.4V
	45Kg.cm@8.4V
Speed	0.18sec/60°@6.0V
	0.16sec /60°@7.4V
	0.14sec /60°@8.4V
Travel Angle	±100° when 500-2500us ±50° when 1000-2000us
Operating Temperature Range	-10℃……+65℃

PWM Command Signal

PWM	MS4512
Signal Voltage	TTL-Level: HIGH:min.3.3V,max.5.0V TTL-Level: Low:min.0.0V,max.1.5V
Pulse Lengths	500-2500us
Pulse Lengths for Position -100° /center/+100°	500us/1500us/2500us
Resolution	<2us

Materials and protective features

Case Material	Aluminum Alloy
Splash Surface Treatment	
Salt Water Resistance	
EMI/RFI Shielding	
Motor Type	Coreless
Gear Set Material	Steel
Position Sensor	Contactless
Position Feedback	Optional
Shielded Connecting Cable	

Dimensions

Case Dimensions	40.5*20*42mm
Weight	76g