X20-8.4-50

Technical Specification

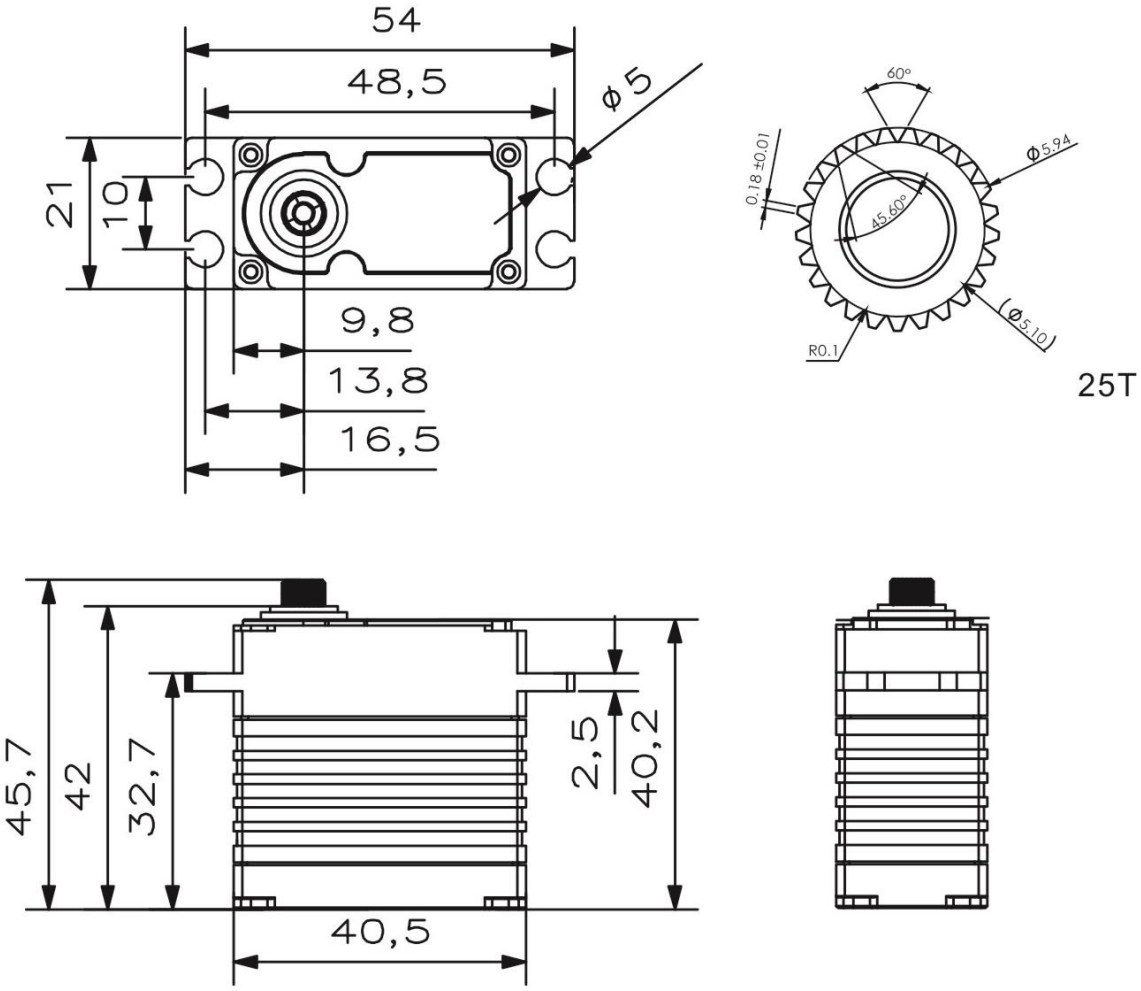

Operating Data

	X20-8.4-50
Operation Voltage(rated)	DC7.4V
Operation Voltage Range	DC6.0V-8.4V
Torque	38Kg.cm@6.0V
	42Kg.cm@7.4V
	45Kg.cm@8.4V
Speed	0.20sec/60 °@6.0V
	0.17sec /60 °@7.4V
	0.15sec /60 °@8.4V
Travel Angle	±50° when 1000-2000us
Operating Temperature Range	-10℃……+65℃

Performance

X20-8.4-50 @7.4V

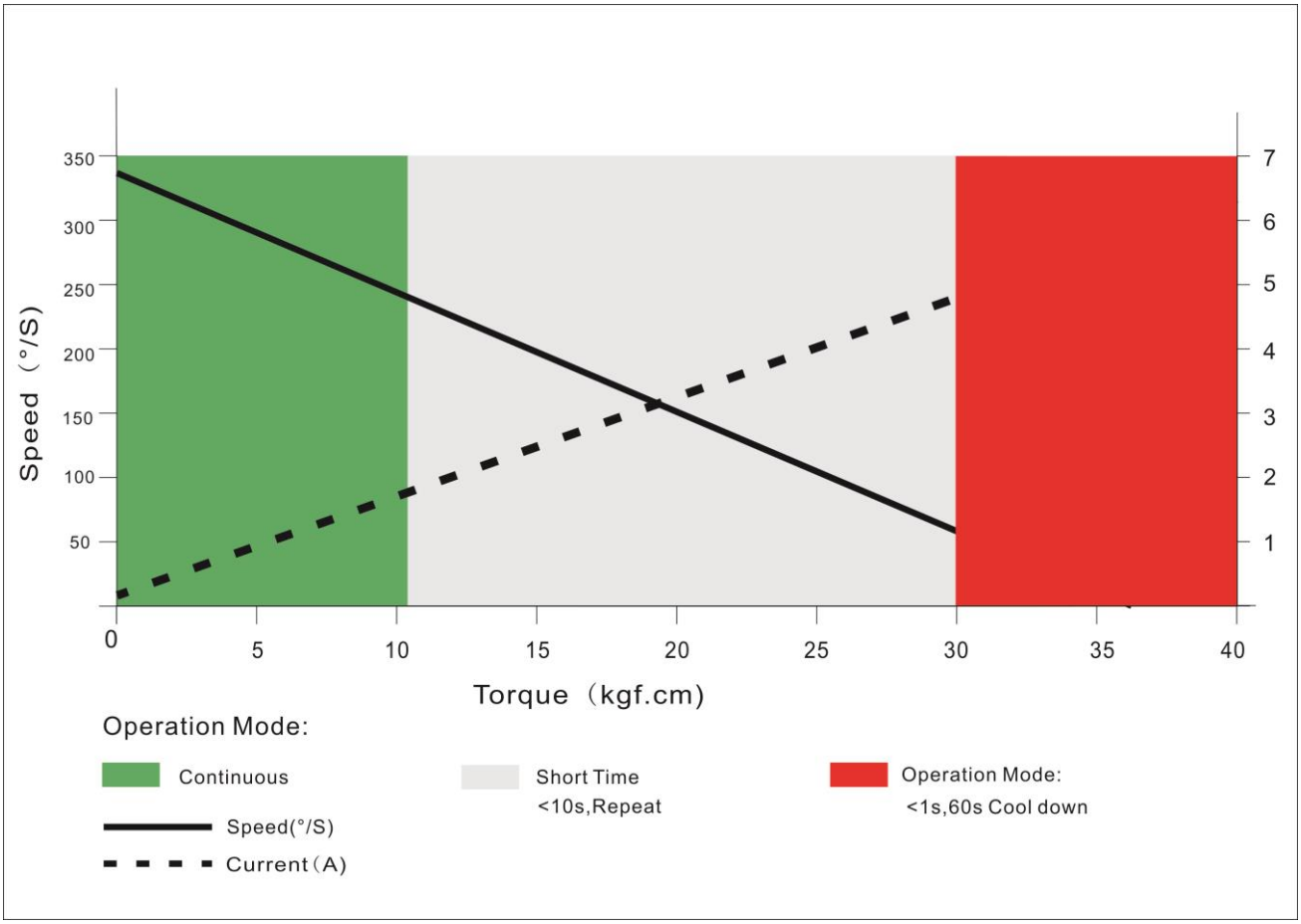

PWM Command Signal

PWM	X20-8.4-50
Signal Voltage	TTL-Level: HIGH:min.3.3V,max.5.0V TTL-Level: Low:min.0.0V,max.1.5V
Pulse Lengths	900-2100us
Pulse Lengths for Position -50° /center/+50°	1000us/1500us/2000us
Resolution	<2us

Materials and protective features

Case Material	Aluminum Alloy
Splash Surface Treatment	
Salt Water Resistance	
EMI/RFI Shielding	
Motor Type	Coreless
Gear Set Material	Hardened Steel
Position Sensor	Potentionmeter
Position Feedback	Optional
Shielded Connecting Cable	

Dimensions

Case Dimensions	40.5*21*42mm
Weight	78g